Marine Electronic Fuel Injection (MEFI)

Section 5C

Distributorless Diagnosis For PFI

This section will be used to perform diagnostic procedures on the Marine Electronic Fuel Injection equipped engines. The section describes system circuits and diagnostic tables used to diagnose the circuits. It will be used to correct Diagnostic Trouble Codes (DTCs) by following tables for either non-scan or scan tool use. This section contains the On-Board Diagnostic (OBD) system check that is the first step to perform before any further diagnostics or repairs are made to the MEFI system.

The assumption is made that on all diagnostic tables, the engine is equipped with GM Marine ECM, sensors, wiring harness, fuel components, and ignition components. The wiring schematics and circuit identifications are for the GM MEFI originally equipped wiring harness.

The diagnostic tables and voltages shown are prepared with the requirement that the system functioned correctly at the time of assembly and that there are no multiple failures.

Contents

ECM Wiring Diagram (1 of 3)

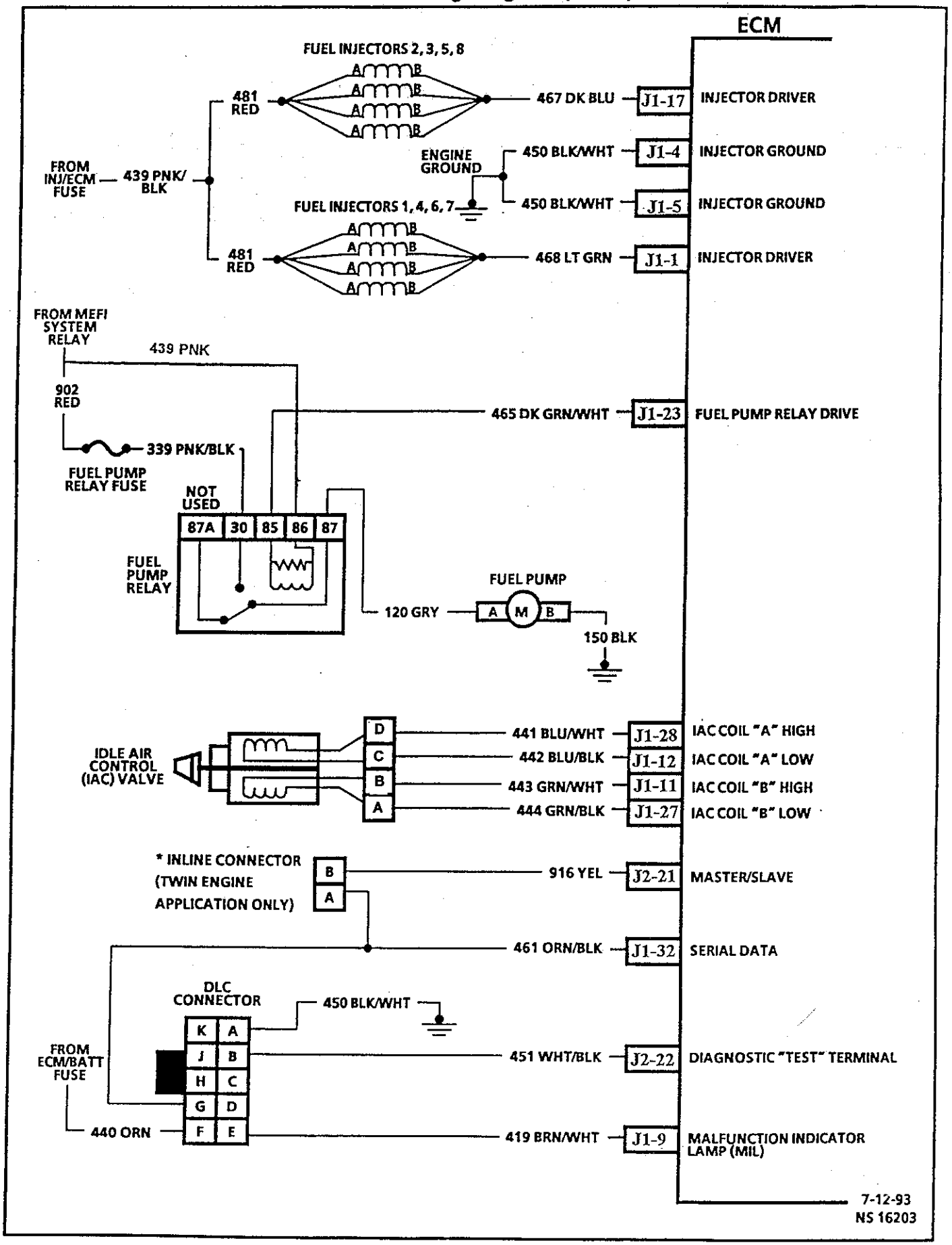

ECM Wiring Diagram (2 of 3)

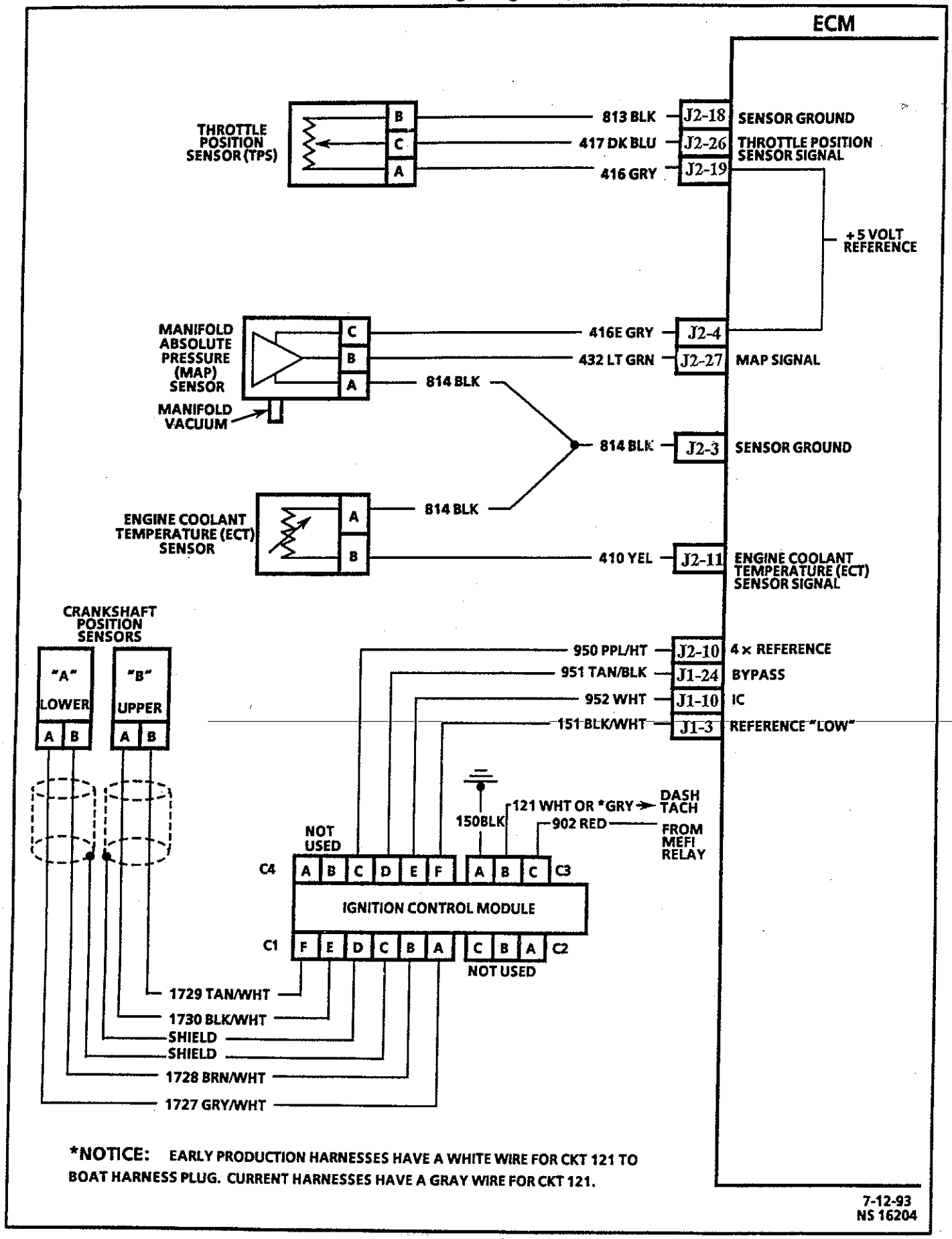

*NOTICE: EARLY PRODUCTION HARNESSES HAVE A WHITE WIRE FOR CKT 121 TO BOAT HARNESS PLUG. CURRENT HARNESSES HAVE A GRAY WIRE FOR CKT 121.

7-12-93
NS 16204

ECM Wiring Diagram (3 of 3)

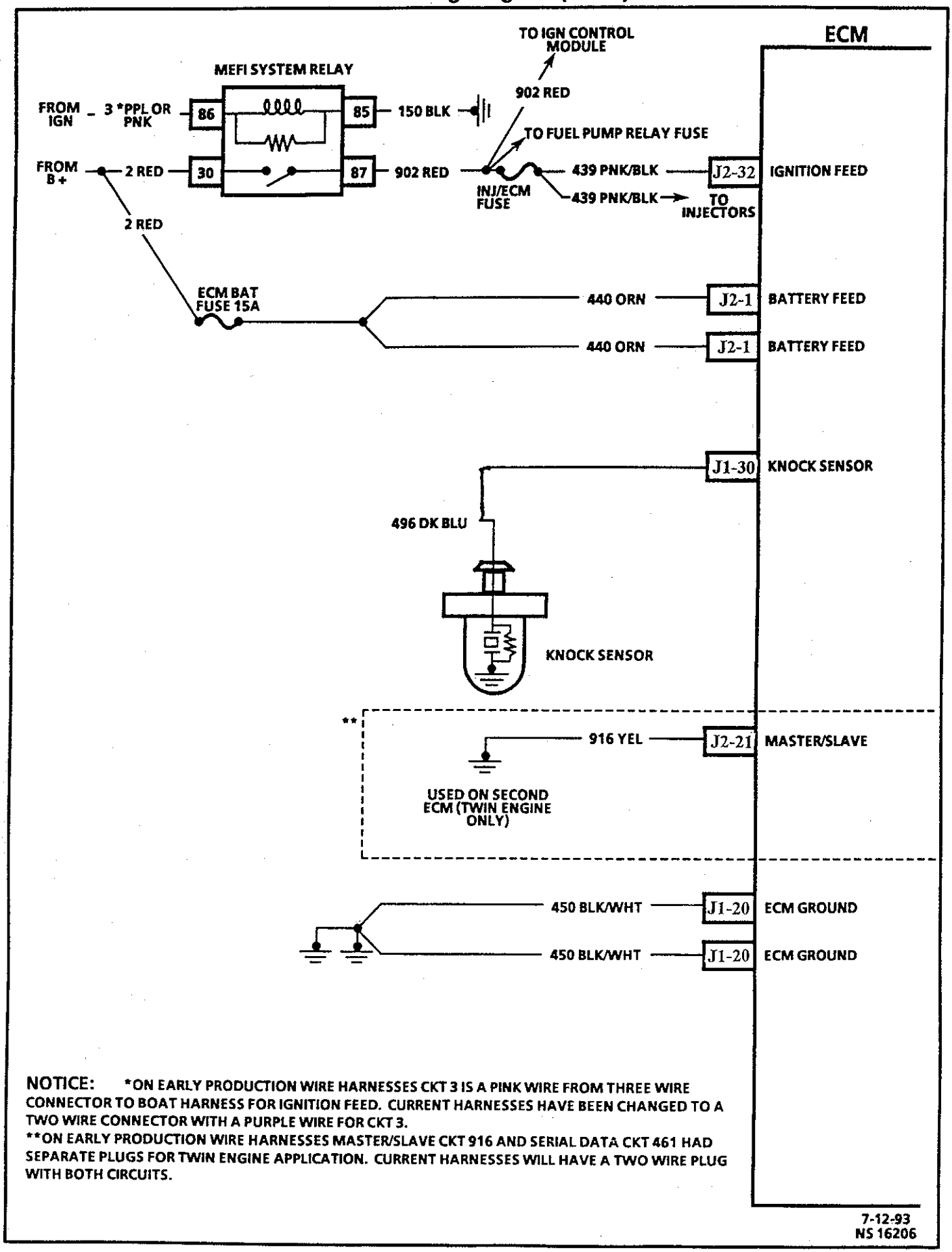

NOTICE: *ON EARLY PRODUCTION WIRE HARNESSES CKT 3 IS A PINK WIRE FROM THREE WIRE CONNECTOR TO BOAT HARNESS FOR IGNITION FEED. CURRENT HARNESSES HAVE BEEN CHANGED TO A TWO WIRE CONNECTOR WITH A PURPLE WIRE FOR CKT 3.

**ON EARLY PRODUCTION WIRE HARNESSES MASTER/SLAVE CKT 916 AND SERIAL DATA CKT 461 HAD SEPARATE PLUGS FOR TWIN ENGINE APPLICATION. CURRENT HARNESSES WILL HAVE A TWO WIRE PLUG WITH BOTH CIRCUITS.

Chart A-3 - Engine Cranks But Will Not Run

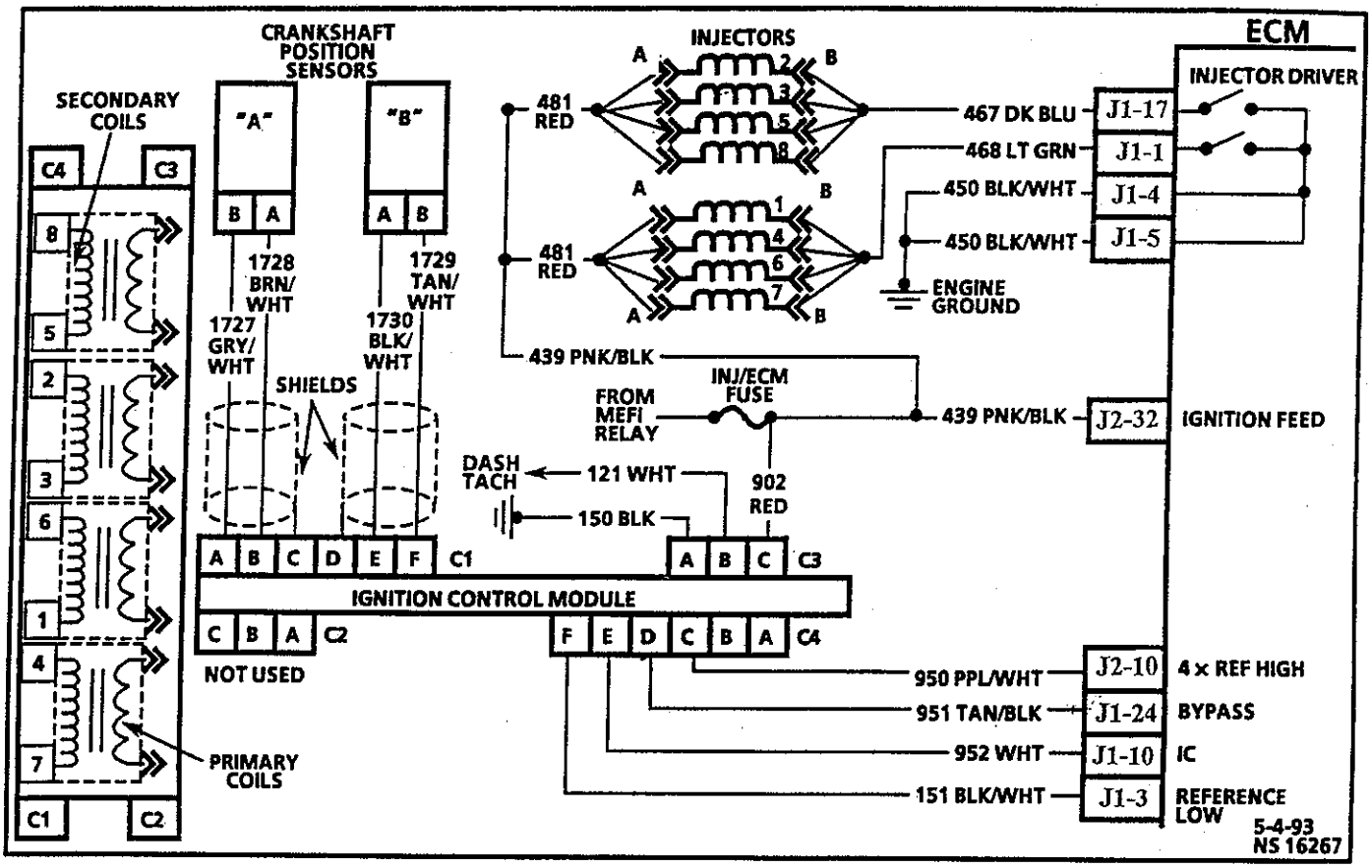

Circuit Description

In the Electronic Ignition (EI) system and the fuel injector circuit, the supply voltage comes from the MEFI system relay. From the MEFI system relay, CKT 902 delivers supply voltage to the injector/ECM fuse, and to the ignition control module connector "C3" terminal "C."

After supply voltage passes through the injector/ECM fuse, it branches out into two separate CKT's 439. One is the supply voltage for injector harness CKT 481 and the other goes to ECM terminal "J2-32." The ECM will control the opening and closing of the injectors through injector driver CKT 468 and CKT 467 by connecting them to ground.

The Ignition Control (IC) module will control the spark to the coils. It interfaces with the ECM through CKT 950. The ECM will control the timing of the spark through CKT 952. For further explanation of electronic ignition system, see "Electronic Ignition System Check," CHART A-7.

Diagnostic Aids

This chart assumes that battery voltage and engine cranking speed are OK, and there is adequate fuel in the tank.

Water or foreign material in fuel system can cause a no start.

A defective MAP sensor may cause a no start or a start and stall condition. To determine if the MAP sensor is causing the problem, disconnect the electrical connector. The ECM will then use a default value for the sensor. If the condition is corrected and the connections are OK, then replace the sensor.

An intermittent may be caused by a poor connection, rubbed through wire insulation or a wire broken inside the insulation. Check for the following items:

- Poor connection or damaged harness. Inspect the ECM harness and connectors for improper mating, broken locks, improperly formed or damaged terminals, poor terminal to wire connection, and damaged harness.

If above are all OK, refer to "Hard Start" in "Symptoms" section.

Test Description

Number(s) below refer to the Step number(s) on the Diagnostic Chart:

5. No spark may be caused by one of several components related to the distributor ignition system. The distributor ignition system check will address all problems related to the causes of a no spark condition.

6. The test light should blink indicating the ECM is controlling the injectors "ON." All lights should blink at the same brightness. All injectors should be within 1 ohm of each other and should not be less than 10 ohms at 21°C (70°F). If an injector is suspected for a no start condition, unplug the suspected injector and try to start the engine.
7. Use fuel pressure gauge J 34730-1A or equivalent. Wrap shop towel around the fuel pressure tap to absorb any small amount of fuel leakage that may occur when installing the gauge.
8. No spark may be caused by one of several components related to the distributor ignition system. The distributor ignition system check will address all problems related to the causes of a no spark condition.
12. Checks for 12 volt supply to injectors. Due to the injectors wired in parallel, there should be a light on both terminals.
13. Checks continuity of CKT 467 and CKT 468.

Chart A-3 - Engine Cranks But Will Not Run

Step	Action	Value(s)	Yes	No
1	Was the "On-Board Diagnostic" (OBD) System Check performed?	—	Go to Step 2	Go to *OBD System Check*
2	Disconnect Throttle Position(TP) sensor. Does the engine start?	—	Go to Step 14	Go to Step 3
3	1. Key "OFF" for minimum of 10 seconds. 2. Key "ON." 3. Listen for fuel pump to run. Does fuel pump run for 2 seconds?	—	Go to Step 4	
4	Crank engine for 1 second and listen for fuel pump to run. Does fuel pump run?	—	Go to Step 5	Go to Step 8
5	Check for secondary ignition spark per manufacturer's recommendation. Is adequate spark present at all cylinders?	—	Go to Step 6	Go to *Chart A-7*
6	1. Disconnect one injector electrical connector. 2. Connect test light J 34730-2C to injector harness connector. 3. While cranking engine, check for blinking light. 4. Remove test light and reconnect injector harness connector. 5. Repeat this test for all injectors. 6. If any lights are blinking dimly, check for shorted injector by comparing injector resistance values. Were all lights blinking brightly?	—	Go to Step 7	Go to Step 10
7	1. Install fuel pressure gauge J 34730-1C or equivalent. 2. Ignition "OFF" for 10 seconds. 3. Ignition "ON." Fuel pump will run for about 2 seconds 4. Note fuel pressure with pump running. The pressure may drop after the pump stops running, but the pressure should not drop immediately to 0 psi. System should hold pressure for at least 15 to 20 seconds. Is fuel pressure within specified value?	234-325 kPa (34-47 psi)	Refer to *Diagnostic Aids* on Facing Page	
8	Check for secondary ignition spark per manufactures recommendation. Is adequate spark present at all cylinders?	—	Go to Step 9	Refer to *Ignition System Check*
9	1. Ignition "OFF." 2. Disconnect ECM "J2" connector. 3. Using a DVOM connected to ground, probe J2-10 of the ECM harness connector while cranking the engine. Is the voltage within the specified value?	1-2 volts	Go to Step 20	Go to Step 15

Chart A-3 - Engine Cranks But Will Not Run (continued)

Step	Action	Value(s)	Yes	No
10	Was the test light a steady light?	—	Go to Step 11	Go to Step 12
11	Check the injector driver circuit with the steady light for a short to ground. If circuit is not shorted, check resistance across each injector in the circuit. Is resistance greater than the specified value?	10 ohms	Go to Step 20	Go to Step 16
12	1. Disconnect injector that did not blink. 2. Ignition "ON." 3. Using a test light connected to ground, probe injector harness connector terminals. Does test light illuminate brightly on both terminals?	—	Go to Step 13	Go to Step 17
13	1. Reconnect injector(s). 2. Ignition "OFF." 3. Disconnect ECM. 4. Ignition "ON." 5. Using a test light connected to ground, probe ECM harness terminals "J1-1" and "J1-17." Does test light illuminate brightly?	—	Go to Step 19	Go to Step 18
14	Replace faulty TP sensor. Is action complete?	—	Go to *OBD System Check*	—
15	1. Locate and repair open or short to ground in CKT 950. 2. If OK, replace faulty ignition control module. Is action complete?	—	Go to *OBD System Check*	—
16	Locate and repair short to ground or replace any injector that measures under 10 ohms. Is action complete?	—	Go to *OBD System Check*	—
17	1. If the light was "OFF" on both terminals, locate and repair open in injector feed circuit. 2. Due to the injectors wired in parallel, there should be a light on both terminals. If not, locate and repair open in the harness to the tested injector. Is action complete?	—	Go to *OBD System Check*	—
18	Locate and repair open in CKT 467 or CKT 468. Is action complete?	—	Go to *OBD System Check*	—
19	1. All checks made to this point would indicate that the ECM is at fault. However, there is a possibility of CKT 467 and CKT 468 being shorted to voltage source either in the engine harness or in the injector harness. 2. Disconnect all injectors. 3. Ignition "ON." 4. Using a test light connected to ground, probe CKT 467 and CKT 468 on the ECM side of the injector harness. (Test one injector harness on each side of the engine.) If light is "ON," locate and repair short to voltage. 5. Check injector harness connector. Be sure terminals are not backed out of connector and contacting each other. 6. If all OK, replace faulty ECM. Is action complete?	—	Go to *OBD System Check*	—
20	Repair faulty ECM connections or replace faulty ECM. Is action complete?	—	Go to *OBD System Check*	—

Chart A-7 - Electronic Ignition (EI) System Check

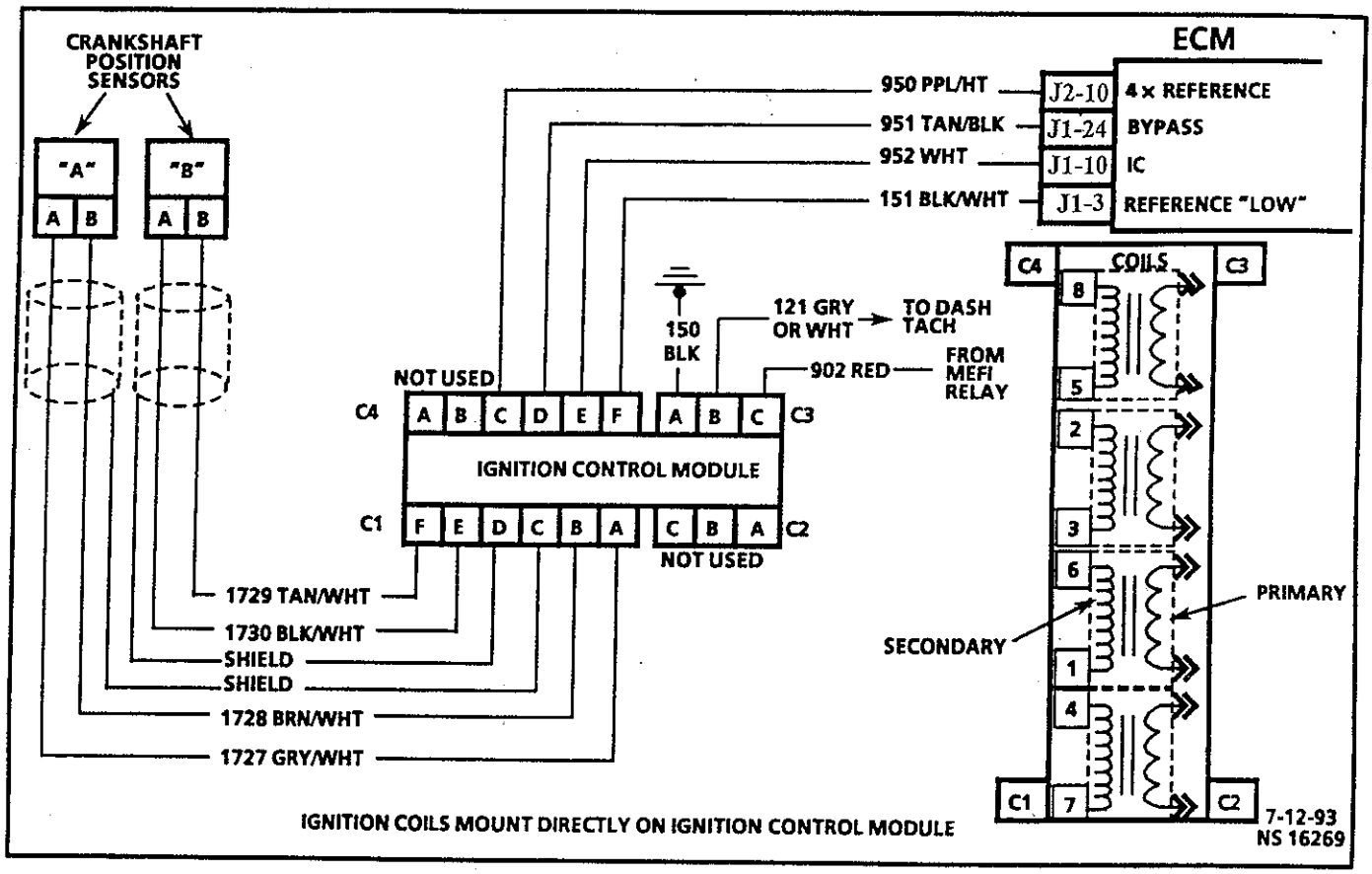

Circuit Description

Diagnostic Aids

When the ignition is turned "ON," the Ignition Control (IC) module is supplied voltage from the MEFI relay through CKT 902 to connector "C3" terminal "C." As the engine turns, the crankshaft position sensors will produce a voltage signal that is sent to the IC module through CKT's 1727, 1728, 1729, and 1730. The voltage signals are processed into reference pulses by the IC module and delivered to the ECM through the 4X Reference CKT 950. The amount of reference pulses the ECM is receiving (cranking or running) will change the mode and function of two circuits between the ECM and the IC module. If in crank mode, approximately below 400 RPM, the bypass CKT 951 will not have any voltage applied and IC CKT 952 will be grounded. Ignition timing is then controlled by the IC module. In the run mode, the bypass CKT 951 will have voltage and CKT 952 will not be grounded, and the ignition timing is controlled by the ECM. CKT 151 is the ground circuit between the ECM and the IC module.

An intermittent may be caused by a poor connection, rubbed through wire insulation or a wire broken inside the insulation. Check for the following items:

- Poor connection or damaged harness. Inspect the ECM harness and connectors for improper mating, broken locks, improperly formed or damaged terminals, poor terminal to wire connection, and damaged harness.

The "tach" needs to be disconnected while testing the ignition system.

Test Description

Number(s) below refer to the Step number(s) on the Diagnostic Chart:

2. The Electronic Ignition (EI) system uses two spark plugs and wires to complete the circuit of each coil. The companion spark plug wire in the circuit must be connected to a known good ground. If disconnecting tach corrects the problem, repair/replace tach circuit as necessary.
5. This test will determine if the ignition control module is not triggering the problem coil, or if the tested coil is at fault. This test could also be performed by substituting a known good ignition coil. The secondary coil winding can be checked with a DVOM. There should be 5,000 to 10,000 ohms across the coil towers. There should not be any continuity from either coil tower to ground.
6. This test will determine if the 12 volt supply and a good ground is available at the ignition control module.
8. Checks for continuity of the crankshaft position sensor and connections.
10. Normal crankshaft position sensor voltage output range is .8 to 1.4 volts (800 to 1400 mv) with a fully charged battery and engine at room temperature. Minimum output voltage (slow cranking, low battery) can be as low as .3 volt (300 mv).

Chart A-7 - Electronic Ignition (EI) System Check

Step	Action	Value(s)	Yes	No
1	Was the "On-Board Diagnostics" (OBD) System Check performed?	—	Go to Step 2	Go to *OBD System Check*
2	1. Check spark plug wires for open circuits, cracks in insulation, or improper seating of terminals at spark plugs and coil towers before proceeding with this table. 2. Check for secondary spark on all cylinders per manufactures recommendation. A few sparks and then nothing is considered "no spark." Is adequate spark present at all cylinders?	—	Refer to *Symptoms Section*	Go to Step 3
3	Is adequate spark present at any of the cylinders?	—	Go to Step 4	Go to Step 6
4	1. Note which spark plug wire has no spark. 2. Ignition "OFF." 3. Remove ignition coils. Is there any evidence of carbon tracking, arcing, or faulty connections between coil(s) and module?	—	Go to Step 11	Go to Step 5
5	1. Switch the ignition coil positions on the module and reinstall. 2. Check for spark on the spark plug wire previously noted for no spark. Is adequate spark now present?	—	Go to Step 12	Go to Step 13
6	1. Ignition "OFF." 2. Disconnect 3-wire "C3" connector at ignition control module. 3. Ignition "ON," engine "OFF." 4. Using test light connected to ground, probe harness terminal "C" (CKT 902). Does test light illuminate brightly?	—	Go to Step 7	Go to Step 14
7	Using test light connected to B+, probe ground CKT 150. Does test light illuminate brightly?	—	Go to Step 8	Go to Step 15
8	1. Ignition "OFF." 2. Disconnect crankshaft position sensor connector "C1" at the ignition control module. 3. Using a DVOM, measure the resistance between harness terminals "A" and "B." Also measure the resistance between harness terminals "E" and "F." Is the resistance within the specified value?	800-1200 ohms	Go to Step 10	Go to Step 9
9	Is the resistance less than the specified value?	800 ohms	Go to Step 16	Go to Step 17
10	1. Select the AC voltage position on the DVOM. 2. While cranking the engine, observe the AC voltage between harness terminals "A" and "B," and also "E" and "F." Is the voltage readings greater than the specified value?	.3 volt (300 mv)	Go to Step 13	Go to Step 18
11	Replace affected ignition coil and/or ignition control module. Is action complete?	—	Go to OBD System Check	—
12	Replace ignition coil originally connected to this spark plug wire. Is action complete?	—	Go to OBD System Check	—

Chart A-7 - Electronic Ignition (EI) System Check (continued)

Step	Action	Value(s)	Yes	No
13	Replace faulty ignition module. Is action complete?	—	Go to *OBD System Check*	—
14	Locate and repair open CKT 902. Is action complete?	—	Go to *OBD System Check*	—
15	Locate and repair open CKT 150. Is action complete?	—	Go to *OBD System Check*	—
16	Locate and repair crankshaft position sensor circuits shorted together. If a problem is found, repair as necessary. Was a problem found?	—	Go to *OBD System Check*	Go to Step 19
17	Locate and repair open crankshaft position sensor circuit. If a problem is found, repair as necessary. Was a problem found?	—	Go to *OBD System Check*	Go to Step 19
18	Locate and repair short to ground in CKT 1727, 1728, 1729, or 1730. If a problem is found, repair as necessary. Was a problem found?	—	Go to *OBD System Check*	Go to Step 19
19	Repair faulty connections or replace faulty crankshaft position sensor(s). Is action complete?	—	Go to *OBD System Check*	—

DTC 41 - Ignition Control (IC) Circuit - Open IC Circuit (Non-Scan Diagnostics)

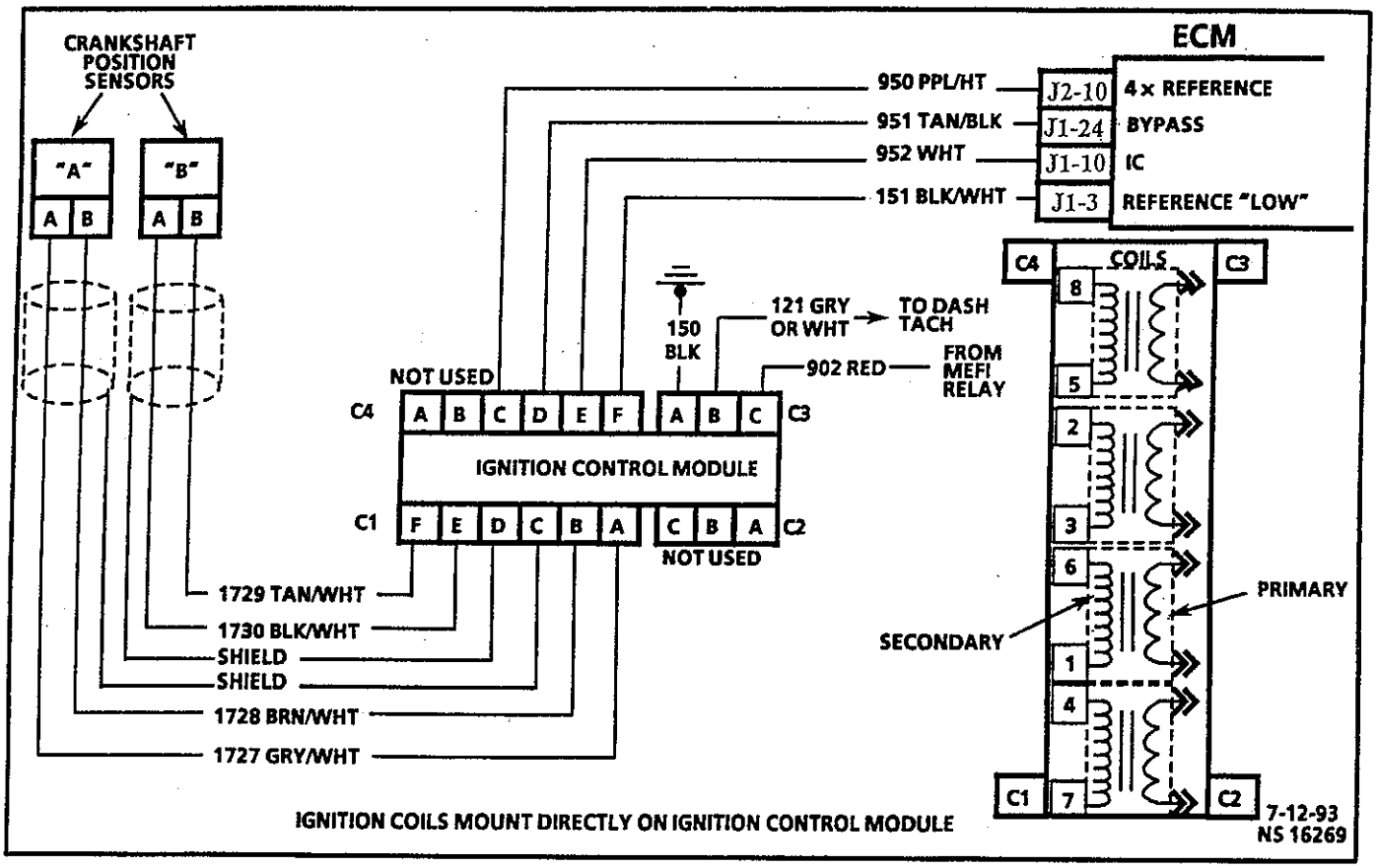

Circuit Description

When the system is running in the ignition module, or crank mode, there is no voltage on the bypass line, and the Ignition Control (IC) module grounds the IC signal. The ECM expects to see no voltage on the IC line during this mode. If the ECM sees voltage, it sets a DTC 41 and will not go into the IC mode.

When the RPM for IC is reached (about 300 RPM), and bypass voltage is applied on CKT 951 by the ECM, the IC line, CKT 952, should no longer be grounded in the IC module. CKT 952 should have varying voltage on it at this point.

If the bypass line is open or shorted to ground, the IC module will not switch to IC mode. The IC line, CKT 952, voltage will be low and DTC 42 will be set.

If CKT 952 is grounded, the IC module will switch to IC mode but, because the line is grounded, there will be no IC signal and a DTC 42 will set.

Diagnostic Aids

Check for the following conditions:

- Poor connection at ECM. Inspect harness connectors for backed out terminals, improper mating, broken locks, improperly formed or damaged terminals, and poor terminal to wire connection.
- Damaged harness. Inspect the wiring harness for damage.

After repairs, clear DTC's following "Clear DTC's Procedure" in the "General Information" section. Failure to do so may result in DTC's not properly being cleared.

If the engine starts and stalls, it may set a false DTC 41. Clear DTC's and repair stalling condition.

Test Description

2. DTC 41 means the ECM has seen an open in the IC circuit. This test confirms DTC 41 and that the fault causing the DTC is present.
3. Checks for a normal IC ground path through the Ignition Control (IC) module.
4. Confirms that DTC 41 is a faulty ECM and not an intermittent open in CKT 952.

DTC 41 - Ignition Control (IC) Circuit - Open IC Circuit (Non-Scan Diagnostics)

Step	Action	Value(s)	Yes	No
1	Was the "On-Board Diagnostic" (OBD) system check performed?	—	Go to Step 2	Go to *OBD System Check*
2	1. Install Marine Diagnostic Trouble Code (MDTC) tool. 2. Clear DTC 41. Refer to "Clear DTC Procedure." 3. Start engine and idle for 2 minutes or until MDTC tool indicates a stored trouble code. 4. Ignition "ON," engine "OFF." 5. Switch MDTC tool to "service mode" and note DTC. Is DTC 41 present?	—	Go to Step 3	Go to Step 8
3	1. Ignition "OFF." 2. Disconnect ECM harness connectors. 3. Using a DVOM selected for ohms, probe ECM harness terminal "J1-10" to ground. Is resistance less than the specified value?	500 ohms	Go to Step 4	Go to Step 5
4	1. Reconnect ECM. 2. Start engine and idle for 2 minutes or until MDTC tool indicates a stored trouble code. 3. Ignition "ON," engine "OFF." 4. Switch MDTC tool to "service mode" and note DTC. Is DTC 41 present?	—	Go to Step 7	Go to Step 8
5	Locate and repair open in CKT 952. If a problem is found, repair as necessary. Was a problem found?	—	Verify Repair	Go to Step 6
6	Replace faulty ignition module. Is action complete?	—	Verify Repair	—
7	Repair faulty ECM connections or replace faulty ECM. Is action complete?	—	Verify Repair	—
8	DTC 41 is intermittent. Refer to "Diagnostic Aids" on facing page. Check harness and connectors for an intermittent open in CKT 952.	—	—	—

DTC 42 - Ignition Control (IC) Circuit - Grounded IC Circuit, Open or Grounded Bypass (Non-Scan Diagnostics)

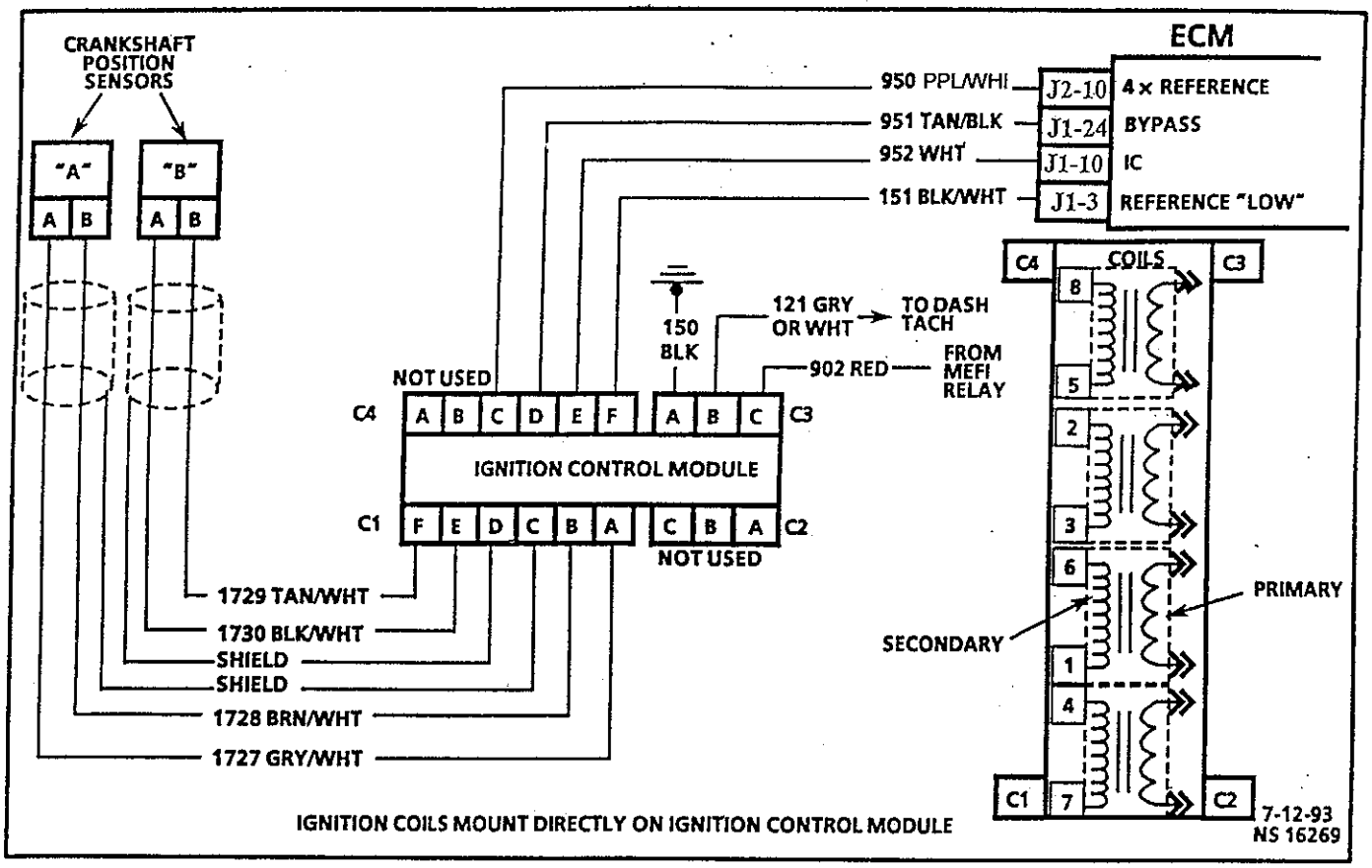

Circuit Description

When the system is running in the ignition module, or crank mode, there is no voltage on the bypass line, and the Ignition Control (IC) module grounds the IC signal. The ECM expects to see no voltage on the IC line during this mode. If the ECM sees voltage, it sets a DTC 41 and will not go into the IC mode.

When the RPM for IC is reached (about 300 RPM), and bypass voltage is applied on CKT 951 by the ECM, the IC line, CKT 952, should no longer be grounded in the IC module. CKT 952 should have varying voltage on it at this point.

If the bypass line is open or shorted to ground, the IC module will not switch to IC mode. The IC line, CKT 952, voltage will be low and DTC 42 will be set.

If CKT 952 is grounded, the IC module will switch to IC mode but, because the line is grounded, there will be no IC signal and a DTC 42 will set.

Diagnostic Aids

Check for the following conditions:

- Poor connection at ECM. Inspect harness connectors for backed out terminals, improper mating, broken locks, improperly formed or damaged terminals, and poor terminal to wire connection.
- Damaged harness. Inspect the wiring harness for damage.

After repairs, clear DTC's following "Clear DTC's Procedure" in the "General Information" section. Failure to do so may result in DTC's not properly being cleared.

If the engine starts and stalls, it may set a false DTC 42. Clear DTC's and repair stalling condition.

Test Description

2. DTC 42 means the ECM has seen an open or short to ground in the bypass circuit, or a short to ground in the IC circuit. This test confirms a DTC 42 and that the fault causing the DTC is present.
3. Checks for a normal IC ground path through the Ignition Control (IC) module. An IC CKT 952 shorted to ground will also read less than 500 ohms, however, this will be checked later.
4. As the test light voltage touches CKT 951, the module should switch, causing the DVOM reading to go from under 500 ohms to over 1000 ohms. The important thing is that the module switched.
5. The module did not switch and this step checks for:
   - Bypass CKT 951 open.
   - Bypass CKT 951 shorted to ground.
   - Faulty ignition module.
7. Confirms that DTC 42 is a faulty ECM and not an intermittent in CKT 951 or CKT 952.

DTC 42 - Ignition Control (IC) Circuit - Grounded IC Circuit, Open or Grounded Bypass (Non-Scan Diagnostics)

Step	Action	Value(s)	Yes	No
1	Was the "On-Board Diagnostic" (OBD) system check performed?	—	Go to Step 2	Go to *OBD System Check*
2	1. Install Marine Diagnostic Trouble Code (MDTC) tool. 2. Clear DTC 42. Refer to "Clear DTC Procedure." 3. Start engine and idle for 2 minutes or until MDTC tool indicates a stored trouble code. 4. Ignition "ON," engine "OFF." 5. Switch MDTC tool to "service mode" and note DTC. Is DTC 42 present?	—	Go to Step 3	Go to Step 13
3	1. Ignition "OFF." 2. Disconnect ECM harness connectors. 3. Using a test light connected to B+, probe ECM harness terminal "J1-24" (CKT 951). Does test light illuminate brightly?		Go to Step 4	Go to Step 7
4	1. Using a DVOM selected for ohms, probe ECM harness "J1-10" to ground. 2. Again, using a test light connected to B+, probe ECM harness terminal "J1-24." 3. As the test light contacts "J1-24," the resistance should switch from under 500 ohms to over 1000 ohms. Does the resistance switch to over the specified value?	1000 ohms	Go to Step 6	Go to Step 5
5	Disconnect ignition module 6-wire connector. Note DVOM that is still connected to CKT 952 and ground. Does resistance become very high (open circuit)?	—	Go to Step 8	Go to Step 9
6	1. Reconnect ECM. 2. Start engine and idle for 2 minutes or until MDTC tool indicates a stored trouble code. Is DTC 42 present?	—	Go to Step 12	Go to Step 13
7	1. Disconnect ignition module 6-wire connector . Does test light illuminate brightly?	—	Go to Step 10	Go to Step 11
8	Locate and repair open in CKT 951. If a problem is found, repair as necessary. Was a problem found?	—	Verify Repair	Go to Step 11
9	Locate and repair short to ground in CKT 952. If a problem is found, repair as necessary. Was a problem found?	—	Verify Repair	Go to Step 11
10	Locate and repair short to ground in CKT 951. Is action complete?	—	Verify Repair	—
11	Replace faulty ignition module. Is action complete?	—	Verify Repair	—
12	Repair faulty ECM connections or replace faulty ECM. Is action complete?	—	Verify Repair	—
13	DTC 42 is intermittent. Refer to "Diagnostic Aids" on facing page. Check harness and connectors for an intermittent open or short to ground in CKT 951, or an intermittent short to ground in CKT 952.	—	—	—

DTC 41 - Ignition Control (IC) Circuit - Open IC Circuit (Scan Diagnostics)

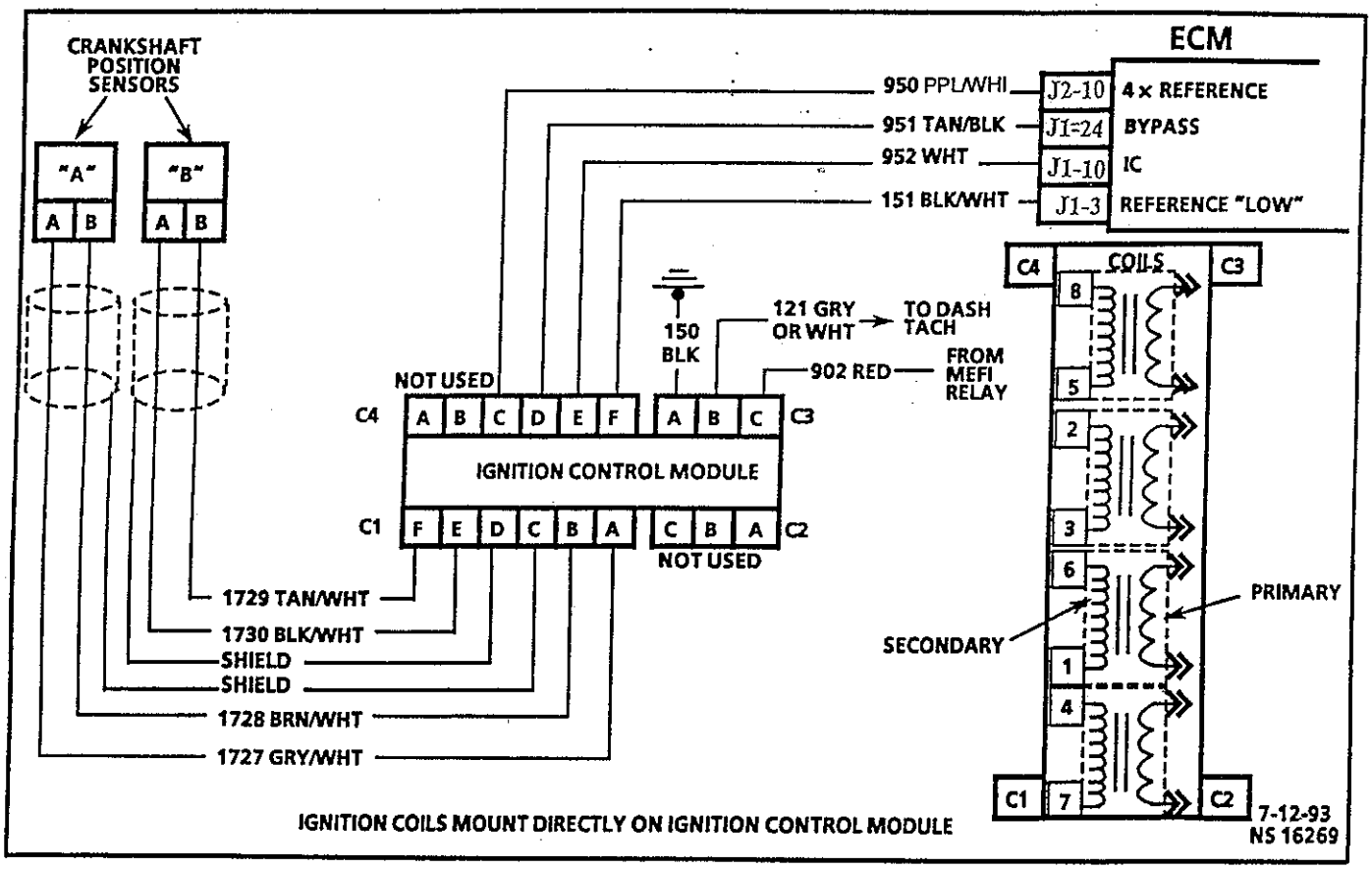

Circuit Description

When the system is running in the ignition module, or crank mode, there is no voltage on the bypass line, and the Ignition Control (IC) module grounds the IC signal. The ECM expects to see no voltage on the IC line during this mode. If the ECM sees voltage, it sets a DTC 41 and will not go into the IC mode.

When the RPM for IC is reached (about 300 RPM), and bypass voltage is applied on CKT 951 by the ECM, the IC line, CKT 952, should no longer be grounded in the IC module. CKT 952 should have varying voltage on it at this point.

If the bypass line is open or shorted to ground, the IC module will not switch to IC mode. The IC line, CKT 952, voltage will be low and DTC 42 will be set.

If CKT 952 is grounded, the IC module will switch to IC mode but, because the line is grounded, there will be no IC signal and a DTC 42 will set.

Diagnostic Aids

Check for the following conditions:

- Poor connection at ECM. Inspect harness connectors for backed out terminals, improper mating, broken locks, improperly formed or damaged terminals, and poor terminal to wire connection.
- Damaged harness. Inspect the wiring harness for damage.

After repairs, clear DTC's following "Clear DTC's Procedure" in the "General Information" section. Failure to do so may result in DTC's not properly being cleared.

If the engine starts and stalls, it may set a false DTC 41. Clear DTC's and repair stalling condition.

Test Description

2. DTC 41 means the ECM has seen an open in the IC circuit. This test confirms DTC 41 and that the fault causing the DTC is present.
3. Checks for a normal IC ground path through the Ignition Control (IC) module.
4. Confirms that DTC 41 is a faulty ECM and not an intermittent open in CKT 952.

DTC 41 - Ignition Control (IC) Circuit - Open IC Circuit (Scan Diagnostics)

Step	Action	Value(s)	Yes	No
1	Was the "On-Board Diagnostic" (OBD) system check performed?	—	Go to Step 2	Go to *OBD System Check*
2	1. Clear DTC 41. Refer to "Clear DTC Procedure." 2. Start engine and idle for 2 minutes or until scan tool indicates a stored trouble code. Is DTC 41 present?	—	Go to Step 3	Go to Step 8
3	1. Ignition "OFF." 2. Disconnect ECM harness connectors. 3. Using a DVOM selected for ohms, probe ECM harness terminal "J1-10" to ground. Is resistance less than the specified value?	500 ohms	Go to Step 4	Go to Step 5
4	1. Reconnect ECM. 2. Start engine and idle for 2 minutes or until scan tool indicates a stored trouble code. Is DTC 41 present?	—	Go to Step 7	Go to Step 8
5	Locate and repair open in CKT 952. If a problem is found, repair as necessary. Was a problem found?	—	Verify Repair	Go to Step 6
6	Replace faulty ignition module. Is action complete?	—	Verify Repair	—
7	Repair faulty ECM connections or replace faulty ECM. Is action complete?	—	Verify Repair	—
8	DTC 41 is intermittent. Refer to "Diagnostic Aids" on facing page. Check harness and connectors for an intermittent open in CKT 952.	—	—	—

DTC 42 - Ignition Control (IC) Circuit - Grounded IC Circuit, Open or Grounded Bypass (Scan Diagnostics)

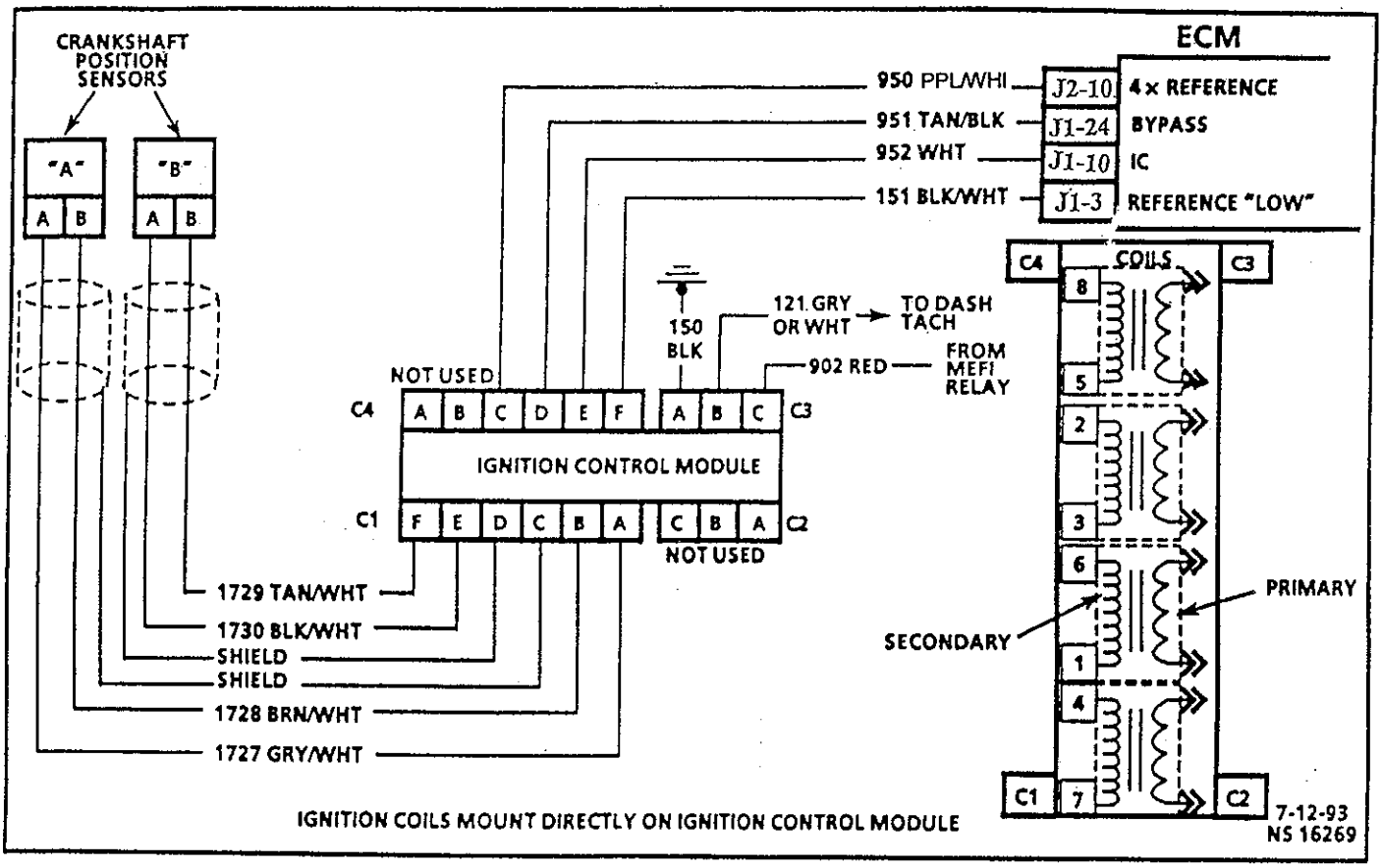

Circuit Description

When the system is running in the ignition module, or crank mode, there is no voltage on the bypass line, and the Ignition Control (IC) module grounds the IC signal. The ECM expects to see no voltage on the IC line during this mode. If the ECM sees voltage, it sets a DTC 41 and will not go into the IC mode.

When the RPM for IC is reached (about 300 RPM), and bypass voltage is applied on CKT 951 by the ECM, the IC line, CKT 952, should no longer be grounded in the IC module. CKT 952 should have varying voltage on it at this point.

If the bypass line is open or shorted to ground, the IC module will not switch to IC mode. The IC line, CKT 952, voltage will be low and DTC 42 will be set.

If CKT 952 is grounded, the IC module will switch to IC mode but, because the line is grounded, there will be no IC signal and a DTC 42 will set.

Diagnostic Aids

Check for the following conditions:

- Poor connection at ECM. Inspect harness connectors for backed out terminals, improper mating, broken locks, improperly formed or damaged terminals, and poor terminal to wire connection.
- Damaged harness. Inspect the wiring harness for damage.

After repairs, clear DTC's following "Clear DTC's Procedure" in the "General Information" section. Failure to do so may result in DTC's not properly being cleared.

If the engine starts and stalls, it may set a false DTC 42. Clear DTC's and repair stalling condition.

Test Description

2. DTC 42 means the ECM has seen an open or short to ground in the bypass circuit, or a short to ground in the IC circuit. This test confirms a DTC 42 and that the fault causing the DTC is present.
3. Checks for a normal IC ground path through the Ignition Control (IC) module. An IC CKT 952 shorted to ground will also read less than 500 ohms, however, this will be checked later.
4. As the test light voltage touches CKT 951, the module should switch, causing the DVOM reading to go from under 500 ohms to over 1000 ohms. The important thing is that the module switched.
5. The module did not switch and this step checks for:
   - Bypass CKT 951 open.
   - Bypass CKT 951 shorted to ground.
   - Faulty ignition module.
7. Confirms that DTC 42 is a faulty ECM and not an intermittent in CKT 951 or CKT 952.

DTC 42 - Ignition Control (IC) Circuit - Grounded IC Circuit, Open or Grounded Bypass (Scan Diagnostics)

Step	Action	Value(s)	Yes	No
1	Was the "On-Board Diagnostic" (OBD) system check performed?	—	Go to Step 2	Go to *OBD System Check*
2	1. Clear DTC 41. Refer to "Clear DTC Procedure." 2. Start engine and idle for 2 minutes or until scan tool indicates a stored trouble code. Is DTC 41 present?	—	Go to Step 3	Go to Step 13
3	1. Ignition "OFF." 2. Disconnect ECM harness connectors. 3. Using a test light connected to B+, probe ECM harness terminal "J1-24" (CKT 951). Does test light illuminate brightly?		Go to Step 4	Go to Step 7
4	1. Using a DVOM selected for ohms, probe ECM harness "J1-10" to ground. 2. Again, using a test light connected to B+, probe ECM harness terminal "J1-24." 3. As the test light contacts "J1-24," the resistance should switch from under 500 ohms to over 1000 ohms. Does the resistance switch to over the specified value?	1000 ohms	Go to Step 6	Go to Step 5
5	Disconnect ignition module 6-wire connector. Note DVOM that is still connected to CKT 952 and ground. Does resistance become very high (open circuit)?	—	Go to Step 8	Go to Step 9
6	1. Reconnect ECM. 2. Start engine and idle for 2 minutes or until scan tool indicates a stored trouble code. Is DTC 41 present?	—	Go to Step 12	Go to Step 13
7	1. Disconnect ignition module 6-wire connector. Does test light illuminate brightly?	—	Go to Step 10	Go to Step 11
8	Locate and repair open in CKT 951. If a problem is found, repair as necessary. Was a problem found?	—	Verify Repair	Go to Step 11
9	Locate and repair short to ground in CKT 952. If a problem is found, repair as necessary. Was a problem found?	—	Verify Repair	Go to Step 11
10	Locate and repair short to ground in CKT 951. Is action complete?	—	Verify Repair	—
11	Replace faulty ignition module. Is action complete?	—	Verify Repair	—
12	Repair faulty ECM connections or replace faulty ECM. Is action complete?	—	Verify Repair	—
13	DTC 42 is intermittent. Refer to "Diagnostic Aids" on facing page. Check harness and connectors for an intermittent open or short to ground in CKT 951, or an intermittent short to ground in CKT 952.	—	—	—